Transmittal, reproduction, dissemination and/or editing of this document as well as utilization of its contents and communication thereof to others without express authorization are prohibited.
未经允许禁止传输、复制、编辑该文档，以及利用其内容进行交流

REVISION RECORD				
REV	ECN	DESCRIPTION	DRFT	DATE

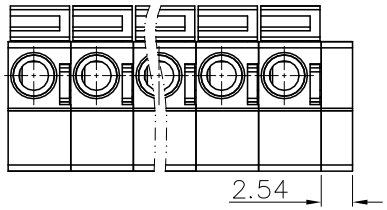

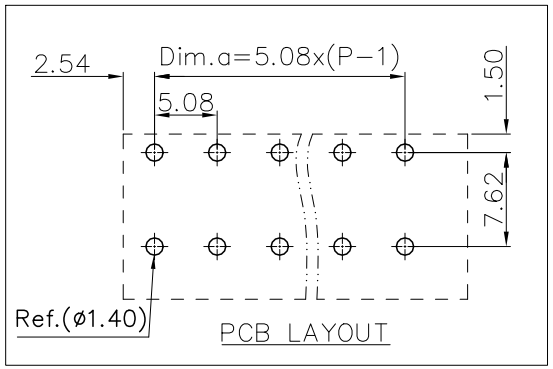

poles	Dim.a	Dim.b
1	/	7.62±0.15
2	5.08±0.15	12.70±0.15
3	10.16±0.15	17.78±0.30
4	15.24±0.30	22.86±0.30
5	20.32±0.30	27.94±0.30
6	25.40±0.30	33.02±0.50
7	30.48±0.50	38.10±0.50
8	35.56±0.50	43.18±0.50
9	40.64±0.50	48.26±0.50
10	45.72±0.50	53.34±0.50
11	50.80±0.50	58.42±0.50
12	55.88±0.50	63.50±0.70
13	60.96±0.70	68.58±0.70
14	66.04±0.70	73.66±0.70
15	71.12±0.70	78.74±0.70
16	76.20±0.70	83.82±0.70
17	81.28±0.70	88.90±0.70
18	86.36±0.70	93.98±0.70
19	91.44±0.70	99.06±0.70
20	96.52±0.70	104.14±1.00
21	101.60±1.00	109.22±1.00
22	106.68±1.00	114.30±1.00
23	111.76±1.00	119.38±1.00
24	116.84±1.00	124.46±1.00
25	121.92±1.00	129.54±1.00
32	157.48±1.20	165.10±1.20
38	187.96±1.20	195.58±1.20
48	238.76±1.50	246.38±1.50
54	269.24±1.50	276.86±1.50

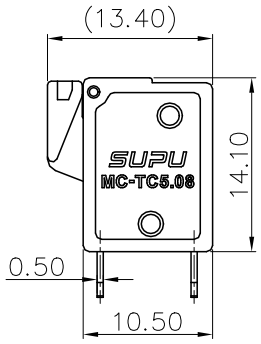

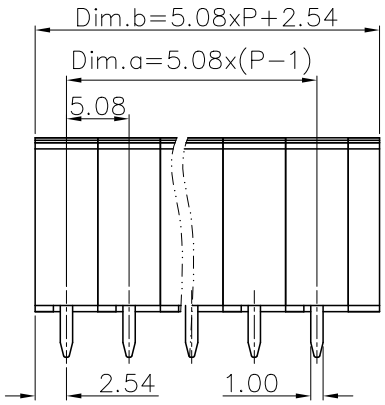

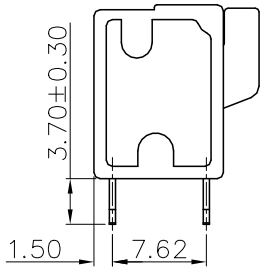

Poles	Item No.
01P~24P	4111511303~4111511326 Green
25P	4111512227 Green
32P	4111512134 Green
38P	4111512228 Green
48P	4111512229 Green
54P	4111512230 Green



NOTES:
UL/CUL Standard
1.Conductor cross section: 24~16AWG
2.Rated Voltage/Current:

Use group	B	C	D
Rated voltage(V)	300	–	300
Rated current(A)	10	–	10

IEC Standard
1.Conductor cross section: 0.2~1.5mm²
2.Rated Voltage/Current:

Surge voltage category	III	III	II
Pollution degree	3	2	2
Rated surge voltage(KV)	4.0	4.0	4.0
Rated voltage(V)	250	400	630
Rated current(A)	15	15	15

Material:

Insulator	PA66	UL94 V-0
Conductor	COPPER ALLOY	Sn,Plated
Spring	STAINLESS STEEL	/
Button	POM	/

General information:
1.Dimension shall be interpreted per ASME Y14.5-2009
2.Pitch: 5.08mm,Poles: 01P~54P
3.Stripping length: 10mm
4.Operating temperature: -40°C~+105°C
5.Wave soldering temperature: 260°C±5°C; time: 5s
6.RoHS Compliance
7.Undimensioned Tolerances:

Pitch Range In mm			Nominal Dimension Range In mm						– ⌒ ⌭
TO 6	Over 6 TO 10	Over 10 TO 24	TO 30	Over 30 TO 60	Over 60 TO 100	Over 100 TO 150	Over 150		0.1/10
									∠
±0.15	±0.20	±0.30	±0.30	±0.50	±0.70	±1.00	±1.30		±2°

Connection method:
1. For Solid wire, peeling wire in right length, push down the wire.
2. For stranded wire, peeling wire in right length, push down the key & fix the wire, or wire furruled and fix then.

HOW TO ORDER:
MC-TC5.08V XXP-N-XX-0001-KXXX

- Sereies No.
- Poles: 01: 01 contacts; 02: 02 contacts; ...; 54: 54 contacts
- N: with press button (Assembly way)
- Color: N/A: Green; BK: Black; BU: Blue; GY: Grey; OG: Orange; RD: Red; YE: Yellow; BN: Brown; WT: White; VT: Violet.
- Company request
- Customer request

订货号 Order No.	MC-TC5.08VXXP-N-0001		名 称 Name	MC-TC间距5.08垂直焊板带按键带盖板固定式端子	未注公差 Tolerance	表面 Surface	
项 目 Item	签 字 Signature	日 期 Date			Tolerance Table	VDI21	
设 计 Design	LZT	2021.03.30	图 号 Drawing No.	PRM002555	版本号 Revision Number	重量 Weight	比例 Scale
审 核 Check	XJ	2021.03.30	材 料 Material	Notes	M0		1:1
工 艺 Process	–	–	物料号 Item No.		第1页/共1页 1 of 1	mm	
标准化 Unify	–	–		Notes	SUPU 宁波速普电子有限公司 NINGBO SUPU ELECTRONICS CO.,LTD.		
批 准 Approve	LWL	2021.03.30					

借通用件登记 Common Part
原图号 Old Draw. No.
底图总号 Assembly No.

1 2 3 4 5 6 7 8
A B C D E F