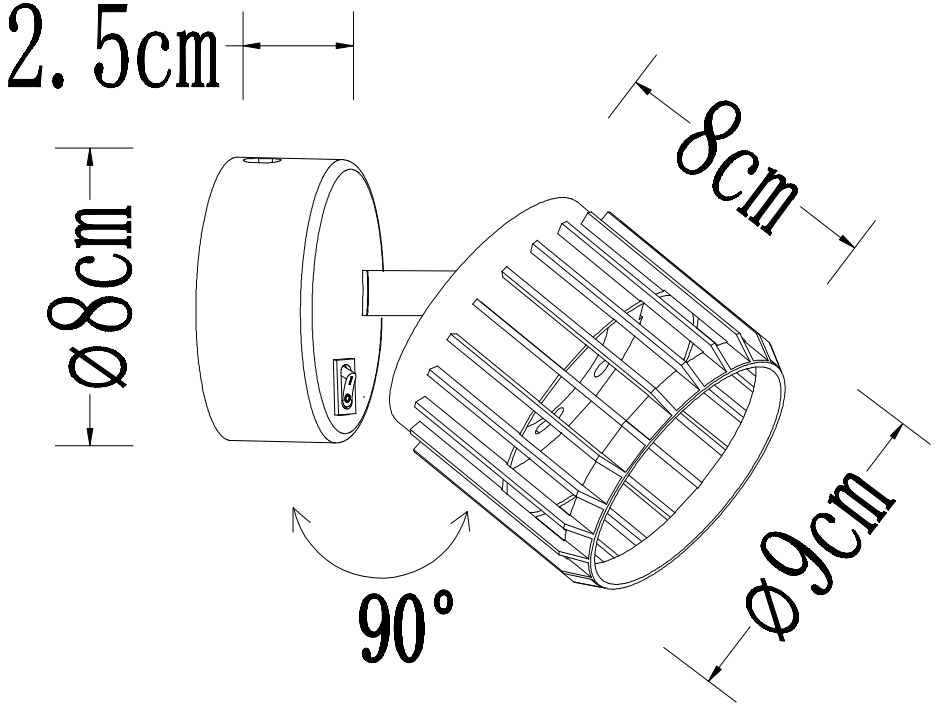

A8031AP-1BK/WH