Transmittal, reproduction, dissemination and/or editing of this document as well as utilization of its contents and communication thereof to others without express authorization are prohibited.
未经允许禁止传输、复制、编辑该文档，以及利用其内容进行交流

REVISION RECORD				
REV	ECN	DESCRIPTION	DRFT	DATE

HOW TO ORDER:
25430X

Sereies No.

Color:
1: Grey
2: Orange
3: White Gray
4: Blue
5: Yellow
6: Green
7: Yellow Green
8: Red

订货号 PART NUMBER	物料号 Item	颜色 COLOR
254301	411066001	灰色 Grey
254302	411066002	橙色 Orange
254303	411066003	白灰色 White Gray
254304	411066004	蓝色 Blue
254305	411066005	黄色 Yellow
254306	411066006	绿色 Green
254307	411066007	黄绿色 Yellow Green
254308	411066008	红色 Red

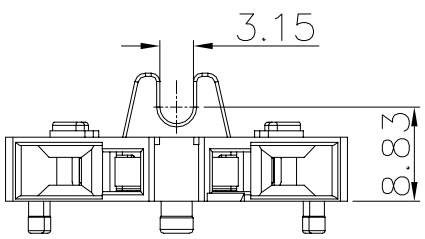

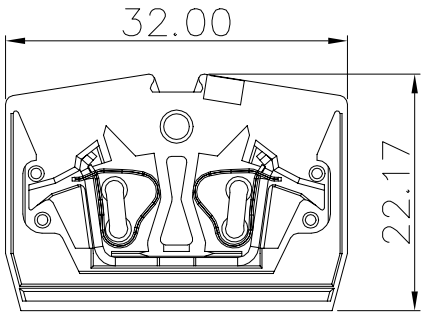

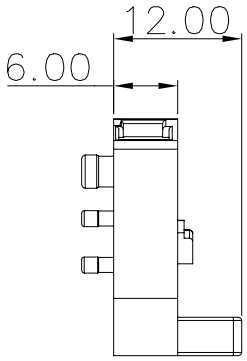

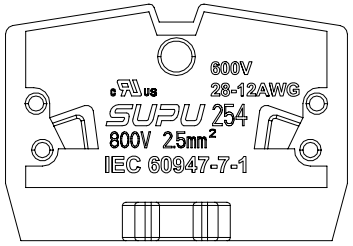

NOTES:

UL/CUL Standard

1.Conductor cross section : 28~12AWG

2.Rated Voltage/Current :

Use group	B	C	D
Rated voltage(V)	600	600	
Rated current(A)	20	20	

IEC Standard

1.Conductor cross section :

Wire range(Solid/Stranded)	0.2–2.5mm²
Solid	0.2–2.5mm²
Stranded	0.2–2.5mm²
Stranded with ferrules without plastic sleeve	0.2–1.5mm²
Stranded with ferrules with plastic sleeve	0.2–1.5mm²

2.Rated Voltage/Current :

Surge voltage category	Ⅲ
Pollution degree	3
Rated surge voltage(KV)	8
Rated voltage(V)	800
Rated current(A)	24

Material:

Insulator	PA66	UL94 V-0
Conductor	Copper alloy	Sn Plated
Spring	Stainless Steel	

General information:

1.Dimension shall be interpreted per ASME Y14.5-2009

2.Stripping length : 8~9mm

3.Operating temperature: -40℃~+105℃

4.RoHS Compliance

5.Undimensioned Tolerances:

Pitch Range In mm			Nominal Dimension Range In mm					
TO 6	Over 6 TO 10	Over 10 TO 24	TO 30	Over 30 TO 60	Over 60 TO 100	Over 100 TO 150	Over 150	0.1/10
±0.15	±0.20	±0.30	±0.30	±0.50	±0.70	±1.00	±1.30	±2°

Connection method:

1. For Solid wire, peeling wire in right length, push down spring to clapthe wire.
2. For stranded wire, connect directly after peeling in right length, or wire furruled and fix in by pushingthe spring.

订货号 Order No.	25430X		名称 Name	254端子-正面带固定器 01P-2线-2.5mm2	未注公差 Tolerance	表面 Surfaace	
项目 Item	签字 Signature	日期 Date			Tolerances Table	VDI21	
设计 Design	SZ	05/18/23″	图号 Drawing No.	PRM000618	版本号 Revision Number	重量 Weight	比例 Scale
审核 Check	LXW	05/18/23″	材料 Material	Notes	M1	/	1:1
工艺 Process	-	-	物料号 Item No.		第1页/共1页 1 of 1	mm	
标准化 Unify	-	-		见附表	SUPU 宁波速普电子有限公司		
批准 Approve	XJ	05/18/23″			NINGBO SUPU ELECTRONICS CO., LTD.		

借通用件登记 Common Part

原图号 Old Draw. No.

底图总号 Assembly No.