ASDR-120



Elcomtech's higher performance family of single phased in rail power supplies were designed with metal housing and for full range AC input from go vAC to 264VAC. with higher efficiency, the entire's series have built-in Dc ok relay contact and higher peak power, they also operate in wide temperature range.
The series offer diverse solutions for demanding automation around the world.

Features

- Higher peak power
- Built-in Active pFC Function
- Built-in DC OK Relay contact
- DC Output Voltage Adjustable
- 100% Full Load Burn-in Test
- Three years warranty

Model Information

Elcomtech Part number	DC VOLTAGE	RATED CURRENT (Max.)	RATED POWER	PEAK POWER (Note. 4)	VOLTAGE ADJ. RANGE
ASDR-120-12	12V	10A	120W	180w (3sec.)	12-14V
ASDR-120-24	24V	5A	120W	180w (3sec.)	24-28V
ASDR-120-48	48V	2.5A	120W	180w (3sec.)	48-55V

Input

RATED INPUT	100 ~ 240VAC
INPUTVOLTAGE RANGE	90~ 264VAC Or 124-370VDC
FREQUENCY RANGE	47 ~ 63HZ
POWER FACTOR(TY P.)	0.93/230VAC at ful lload 0.96/115VAC at ful lload
EFFICIENCY(TY P.)	89% ASDR-120-12 87% ASDR-120-24 90% ASDR-120-48
AC CURRENT(TY P.)	1 .4A/1 15VAC 0.7A/230VAC
IN RUSH CURRENT(TY P.)	35A/1 15VAC 70A/230VAC
LEAKAGE CURRENT	<1mA/240VAC

output

RIPPLE&NOISE (max.)	100mVp-p ASDR-120-12 100mVp-p ASDR-120-24 120mVp-p ASDR-120-48
VOLTAGE TOLERANCE	±2.0%
LINE REGULATION	±0.5%
LOAD REGULATION	±1.0%
SETUP RISE TIME	1500ms ,60ms/230VAC at ful lload 3000ms,60ms/115VAC at full load
HOLDUP TIME(TY P.) www.ying jiao. com	20ms/230VAC at ful lload 20ms/1 15VAC at ful lload

protection

OVERLOAD	Normally works within 110 ~ 150%rated output power for more than 5seconds and then shutdown o/pvoltage with auto-recovery >150%rated power, constant current limiting with auto-recovery within 5seconds and may cause to shutdown if over3 seconds
OVER VOLTAGE	14~17V ASDR-120-12 29~33V ASDR-120-24 56~65V ASDR-120-48 protection type:shutdown o/p voltage, re-power on to recover
OVER TEMPERATURE	95 ℃±5 ℃ (T SW)detect on heat sink of power switch protection type:shutdown o/p voltage, recovers automatically after temperature goes down

Function

DC OK REALY CONTACT RATINGS (max.)	60v dc/0.3A,30v dc/1A,30vac/0.5A resistive load

Environment

WORKING TEMP.	-25 ~ +70 ℃ (Refer to"De rating curve"
WORKING HUMIDITY	20 ~ 95% RH non-condensing
STORAGE TEMP., HUMIDITY	-40 ~ +85 ℃,10 ~ 95% RH
COLD START	-40 ℃
MTBF	1500k hrs min.Tel cord ias R-332 (Bell core)
TEMP. COEFFICIENT	±0.03%/℃ (0 ~ 50 ℃
VIBRATION	component:10 ~ 500HZ,26 10min./1cycle,60min. each along x,y,z axes;Mounting:compliance to IIE C60068-2-6

SAFETY& EMC

SAFETY STANDARDS	UL61010-1, UL61010-2-201, BS EN/EN61010-1
WITHSTAND VOLTAGE	I/P-O/P:3KV AC I/P-FG:2K VAC O/P-FG:0.5KV AC O/P-DC OK:0.5K VAC
ISOLATION RESISTANCE	I/P-O/PI/P-FG, O/P-FG:>100M ohms/500V DC/25 ℃/70%RH
EMC EMISSION	compliance toBS EN/EN55032, BSEN/EN61000-3-2,-3
EMC IMMUNITY	compliance to BSEN/EN61000-4-2,3,4,5,6,8,11,BS EN/EN55024, BS EN/EN61000-6-2 (B SEN/EN50082-2), BS EN/EN61204-3, heavy industry level

Note

1. Alparameters NOTspeciallymentioned at230VAc input, rated load and25℃ of ambient temperature
2. Ripple&noise are measured from peak to peak with band width limit of 20MHz(0.1 uF and 47 uF/50V parallel capacitor under Dc output full load, Ac nominal input25℃ ambient temperature).
3. Installation clearances: top with 40mm, bottom with 20 mm, left and right 5 mm. Increase the space to 10-15mm when the adjacent device is heat source
4. It could hold up 3 seconds max when reached peak power 180W, please refer to peak loading curves.
5. Derating may be needed under low input voltage. Please check the derating curve for more details.
6. After 30 minutes of burn-in.
7. The ambienttemperaturederating of3.5 ℃/1000m for operating altitude higher than2000m(6500ft).

Dimensions&weight

width:	40mm / 1 .57in
Height:	125mm /4.92in
Depth:	1 13mm /4.45in
weight:	0.67kg

Packing

Carton Size:	31.5 x 30 x 30 CM
	12.4 x 11.81 x 11.81 in
Master Carton Quantities:	20pcs / Carton

Mechanical Specification

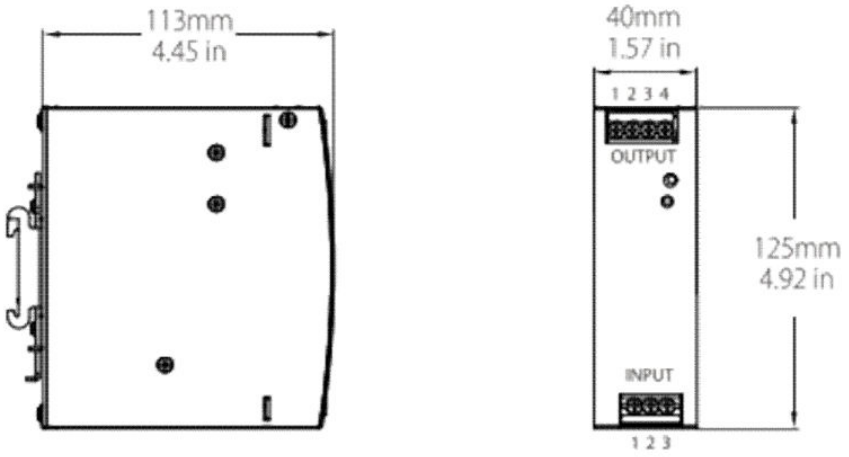

Input

No.	Description
1	FG ⏚
2	AC/N
3	AC/L

Output

No.	Description
1,2	Relay Contact
3	DC OUTPUT -V
4	DC OUTPUT+V

Block Diagram

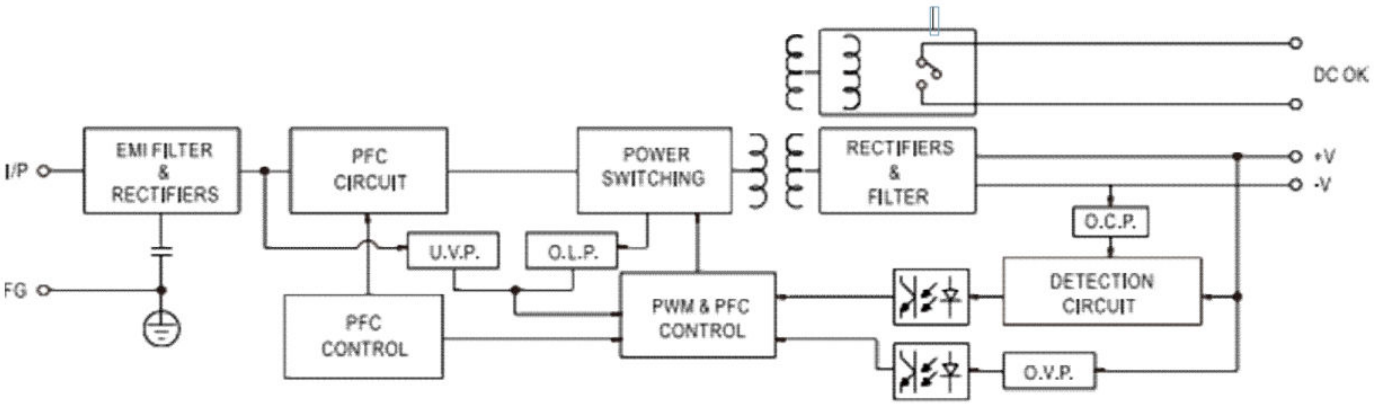

DC OK Relay Contact

Contact Close	PSU turns on / DC OK.
Contact Open	PSU turns off / DC Fail.
Contact Ratings (max.)	30V/1A resistive load.

Peak Loading

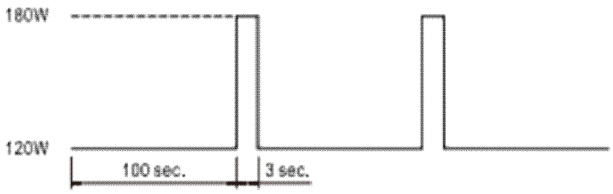

Full Load

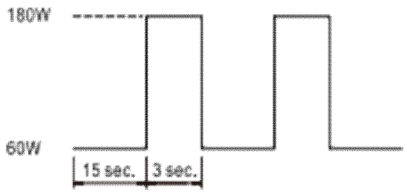

Half Load

Deduction Curve and Temperature

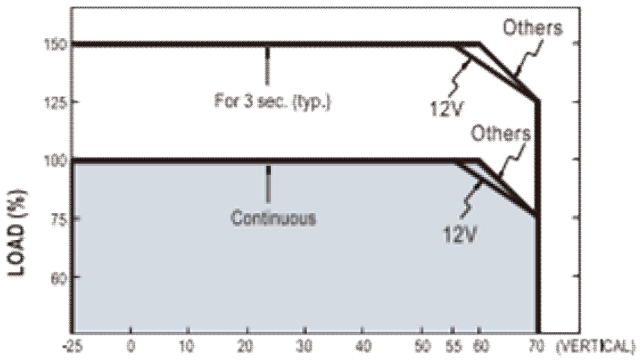

Minus Output and Input Voltage Curves

