# PN 8/3011

**NO/CS/WS** code 111 XXX

**HSS** code 141 XXX

## Závitníky sadové
## Set of hand taps
## Satzgewindebohrer
## Метчики наборные

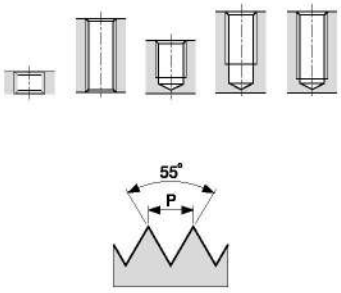


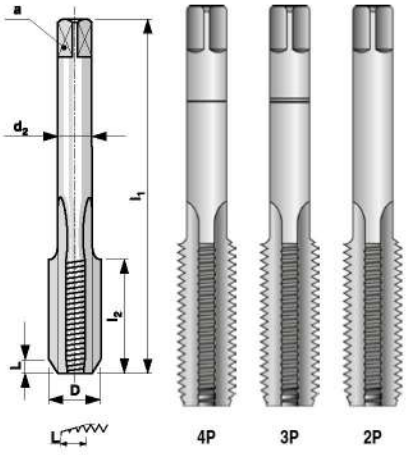


**BSW (W)**

Whitworthův závit
Whitworth thread
Whitworth-Gewinde
Резьба Витворта

Lícování: střední / Tolerance: medium /
Toleranz: mittel / Подгонка: средний класс

| D | z/1" | P | $l_1$ | $l_2$ | $d_2$ | a | | * | code NO/CS/WS | code HSS |
|---|---|---|---|---|---|---|---|---|---|---|
| BSW 3/32" | 48 | 0,529 | 34 | 10 | 3,15 | 2,5 | 1,85 | 3 | 111 332 | 141 332 |
| BSW 1/8" | 40 | 0,635 | 37 | 12 | 4 | 3,15 | 2,55 | 3 | 111 180 | 141 180 |
| BSW 5/32" | 32 | 0,794 | 41 | 14 | 5 | 4 | 3,10 | 3 | 111 532 | 141 532 |
| BSW 3/16" | 24 | 1,058 | 44 | 18 | 5 | 4 | 3,60 | 3 | 111 316 | 141 316 |
| BSW 7/32" | 24 | 1,058 | 44 | 18 | 5,6 | 4,5 | 4,40 | 3 | 111 732 | 141 732 |
| BSW 1/4" | 20 | 1,270 | 48 | 22 | 6,3 | 5 | 5,10 | 3 | 111 140 | 141 140 |
| BSW 5/16" | 18 | 1,411 | 51 | 26 | 5,6 | 4,5 | 6,50 | 3 | 111 516 | 141 516 |
| BSW 3/8" | 16 | 1,588 | 60 | 26 | 7,1 | 5,6 | 7,90 | 3 | 111 380 | 141 380 |
| BSW 7/16" | 14 | 1,814 | 60 | 28 | 8 | 6,3 | 9,20 | 3 | 111 716 | 141 716 |
| BSW 1/2" | 12 | 2,117 | 70 | 32 | 9 | 7,1 | 10,50 | 3 | 111 120 | 141 120 |
| BSW 9/16" | 12 | 2,117 | 70 | 32 | 9 | 7,1 | 12,00 | 3 | 111 916 | 141 916 |
| BSW 5/8" | 11 | 2,309 | 80 | 36 | 12,5 | 10 | 13,50 | 3 | 111 580 | 141 580 |
| BSW 3/4" | 10 | 2,540 | 90 | 40 | 14 | 11,2 | 16,50 | 3 | 111 340 | 141 340 |
| BSW 7/8" | 9 | 2,822 | 100 | 45 | 18 | 14 | 19,25 | 3 | 111 780 | 141 780 |
| BSW 1" | 8 | 3,175 | 110 | 45 | 20 | 16 | 21,75 | 3 | 111 100 | 141 100 |

* kusy v sadě / pcs in set / Stck in Satz / штук в наборе

# ČSN 22 3012

**NO/CS/WS** code 112 XXX

**HSS** code 142 XXX

## Závitníky sadové
## Set of hand taps
## Satzgewindebohrer
## Метчики наборные

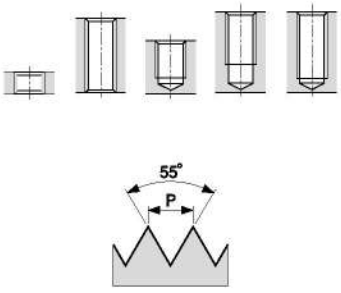


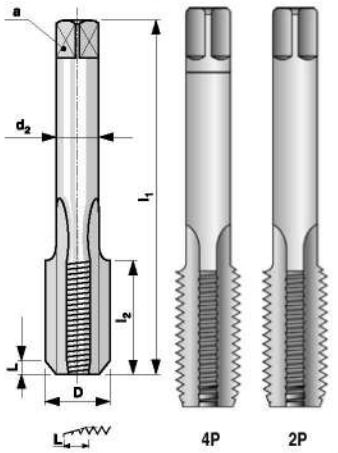


**G (BSP)**

Trubkový závit
Pipe thread
Rohrgewinde
Трубная резьба

Lícování: A / Tolerance: A /
Toleranz: A / Подгонка: A

| D | z/1" | P | $l_1$ | $l_2$ | $d_2$ | a | | * | code NO/CS/WS | code HSS |
|---|---|---|---|---|---|---|---|---|---|---|
| G 1/16" | 28 | 0,907 | 52 | 14 | 5,6 | 4,5 | 6,80 | 2 | 112 116 | 142 116 |
| G 1/8" | 28 | 0,907 | 59 | 15 | 8 | 6,3 | 8,80 | 2 | 112 180 | 142 180 |
| G 1/4" | 19 | 1,337 | 67 | 19 | 10 | 8 | 11,80 | 2 | 112 140 | 142 140 |
| G 3/8" | 19 | 1,337 | 75 | 21 | 12,5 | 10 | 15,20 | 2 | 112 380 | 142 380 |
| G 1/2" | 14 | 1,814 | 87 | 26 | 16 | 12,5 | 19,00 | 2 | 112 120 | 142 120 |
| G 5/8" | 14 | 1,814 | 91 | 26 | 18 | 14 | 21,00 | 2 | 112 580 | 142 580 |
| G 3/4" | 14 | 1,814 | 96 | 28 | 20 | 16 | 24,50 | 2 | 112 340 | 142 340 |
| G 7/8" | 14 | 1,814 | 102 | 29 | 22,4 | 18 | 28,25 | 2 | 112 780 | 142 780 |
| G 1" | 11 | 2,309 | 109 | 33 | 25 | 20 | 30,75 | 2 | 112 100 | 142 100 |

* kusy v sadě / pcs in set / Stck in Satz / штук в наборе

BUČOVICE TOOLS a.s.

*Materiál: NO; HSS*
*Provedení: nebroušený závit*

*Material: CS-carbon steel; HSS*
*Execution: non-ground thread*

*Werkstoff: WS-Werkzeugstahl; HSS*
*Ausführung: nicht geschliffenes Gewinde*

*Материал: NO-инструментальная сталь; HSS*
*Изготовлено: нешлифованная резьба*