EBM16PU10		
Operating Current		16A
Product		Multipole
Type		Extension Type Socket
Contact		16 Poles
Usage Category		AC15
Mechanical Life	**Min Qty**	≥ 500
Electrical Life	**Min Qty**	≥ 100
Operating Frequency	**On-Off/Hour**	Mech.240 Elec.120
Insulation Voltage	**Ui**	690V
Impulse Withstand Voltage	**Uimp**	6 kV
Dielectric Strength (Body-Contact)		1890V AC
Dielectric Strength (Contact-Contact)		3000V AC
Isolation Resistance		10 MΩ MİN. (500 V DC)
Operating Temperature		-40 / +125 °C
Pollution Degree		2
Protection Degree		IP65
Body Material		Metal
Production Time		31.12.1899 00:00:00
Serial		EBM Series
Entry		Side Entry
Specifications	Wide product variety	
	IP65 in closed position	
	Universal inserts	
	Easy cabling	
	Different locking types	
	Powdercoated metal housing	
Standards / Certificates	TS EN 61984	

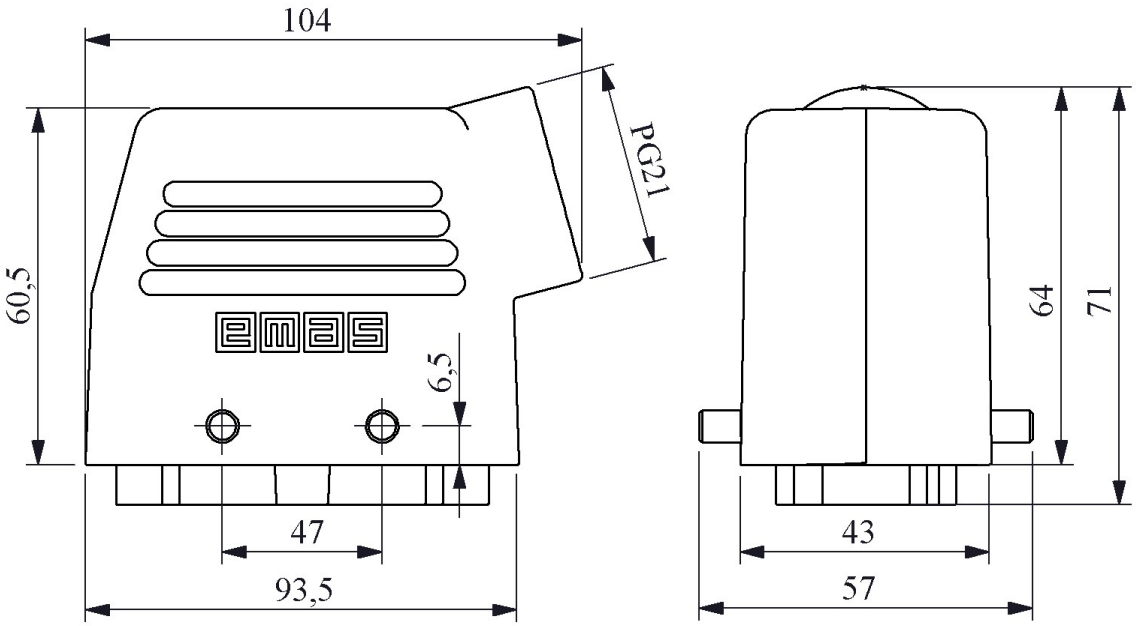

Kontak Sayısı: 16P+E