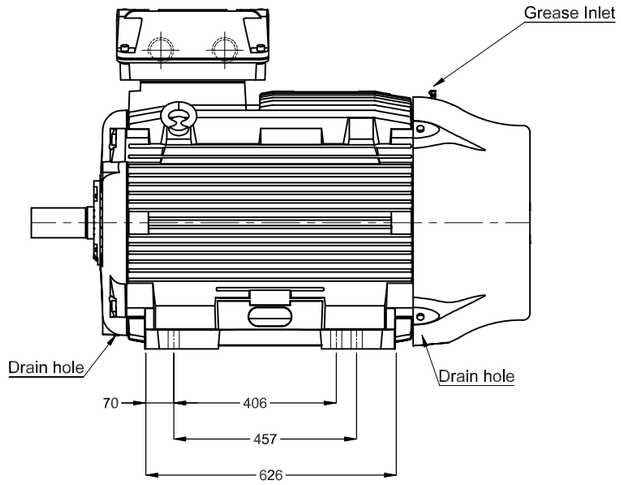

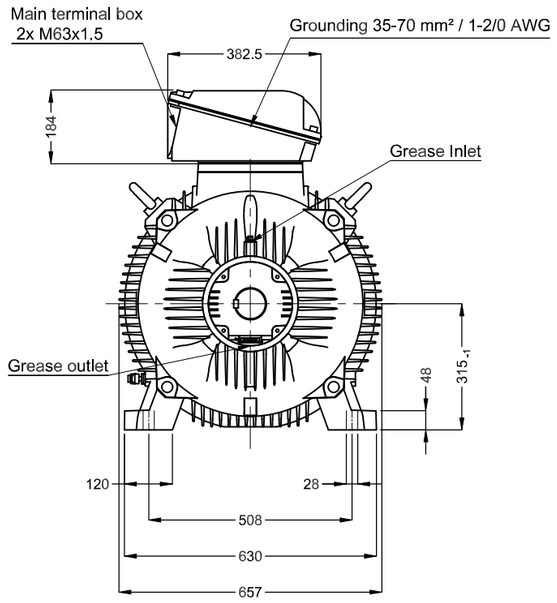

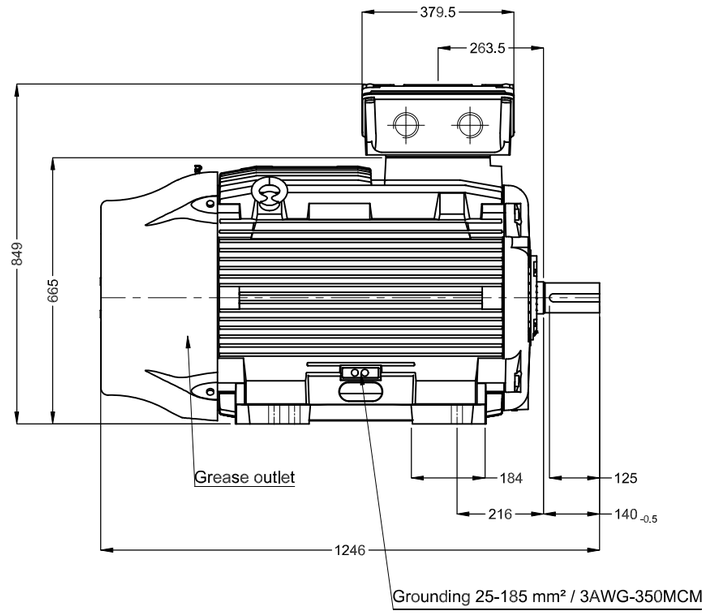

NDE endshield with electrically insulated bearing hub
Color RAL 7024
Painting plan 203A
Mounting B3T

DE Shaft End

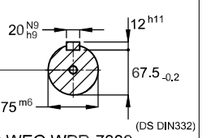

DM20 WEG WPR-7339

160 kW 02 Poles 50 Hz | A

					Scale	1 : 15	
			PIRWBUSER				00
ECM	LOC	SUMMARY OF MODIFICATIONS	EXECUTED	CHECKED	RELEASED	DATE	VER

EXECUTED	PIRWBUSER	THREE PH. MOTOR WGOST IE1	PREVIEW
CHECKED		FRAME 315S/M IP55 TEFC	WDD 00
RELEASED			
REL. DATE		WEG Saint-Petersburg [Support]	SHEET 1 / 1

Dimensions in mm

A3

WEG's property. Forbidden reproduction without previous authorization.