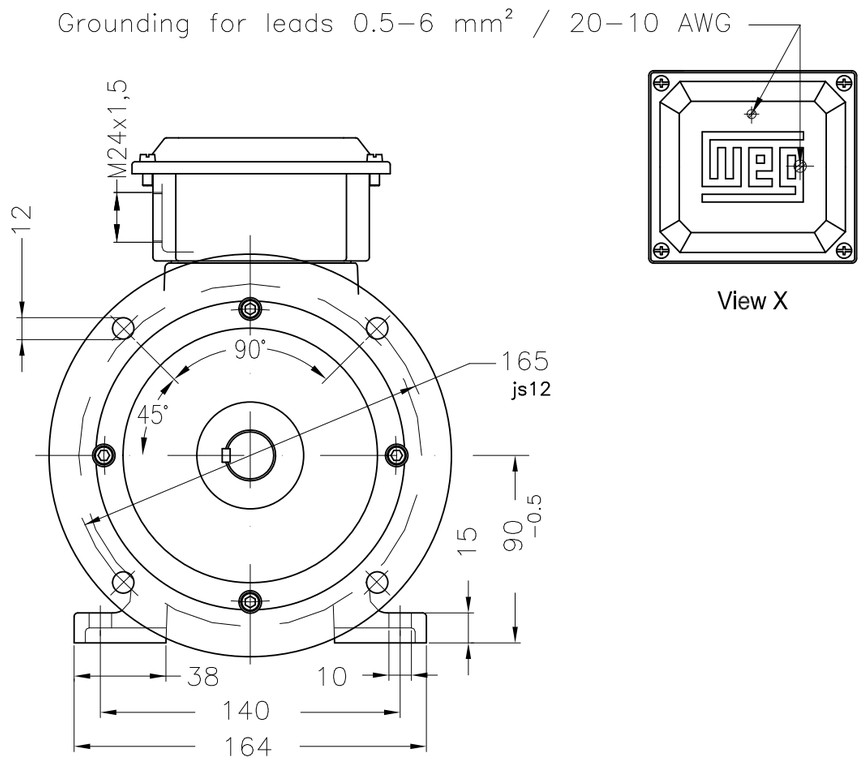

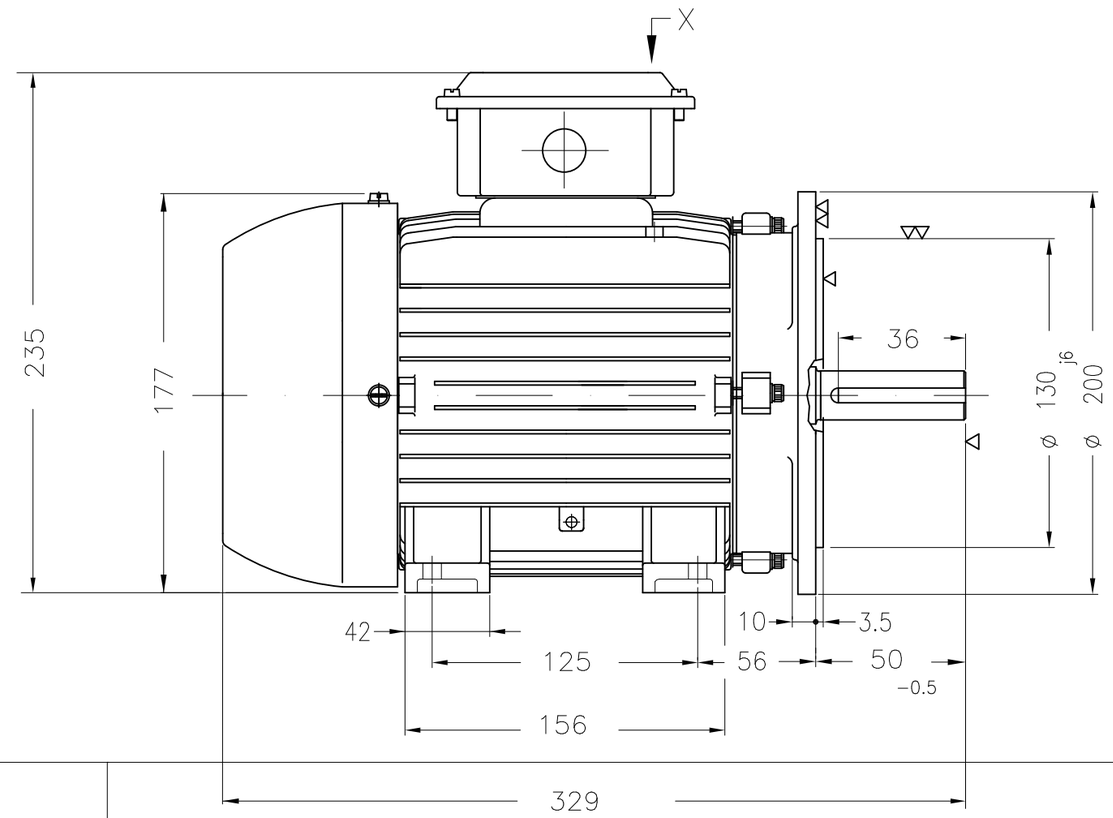

Sealing - V ring
Without alarm thermal protection
Without overload protector at bearing
Without bearing cap
Without switch off thermal protection
Without Grease fitting
90L
Class F insulation - 80K temperature rise
NDE-bearing with double shield-ZZ
Shaft material - SAE/ABNT 1040/45
Rotation CW and CCW
Without certification
Packing - cardboard box
DE-bearing with double shield-ZZ
A key
Standard balancing with half key
Without thermal protection on bearings
Outlet leads on left side when looking at shaft end
Color RAL 5009
Painting plan 201A
Mounting B35T

DE Shaft End

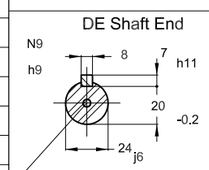

DM8 WEG WPR-7339 (DS DIN332)

1.5 kW 04 Poles 50 Hz | A

WEG CENTRAL ASIA LLP

ECM	LOC	SUMMARY OF MODIFICATIONS	EXECUTED	CHECKED	RELEASED	DATE	VER
		421698554	HONGHAOJIE	TANJIE	TANJIE	27.11.2022	00

EXECUTED	HONGHAOJIE	THREE PHASE W20 MOTOR	1327278568
CHECKED	TANJIE	FRAME 90L IP55 TEFC	WDD 00
RELEASED	TANJIE		
REL. DATE	27.11.2022	WMO Jaragua do Sul Product Engineering	SHEET 1 / 1

Dimensions in mm

XME A3

WEG's property. Forbidden reproduction without previous authorization.