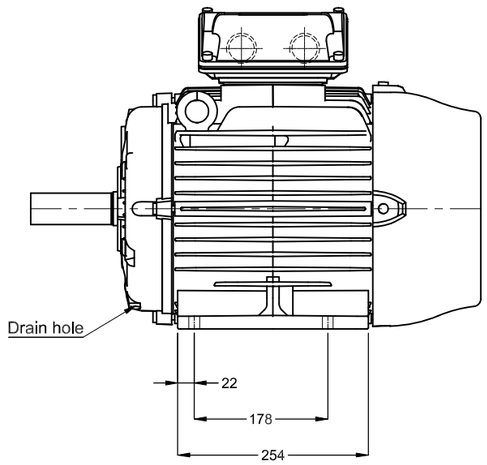

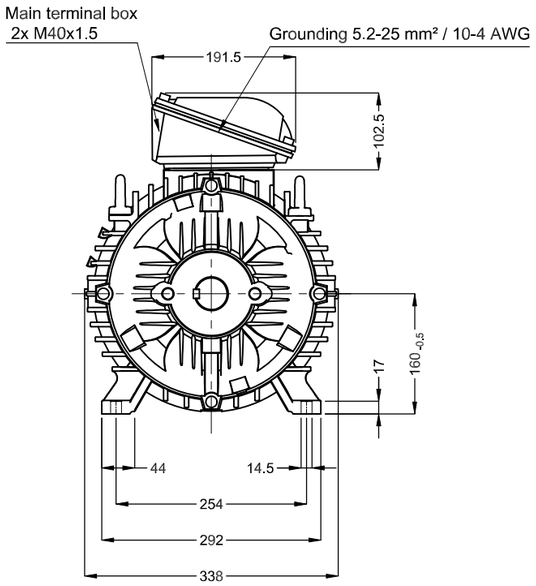

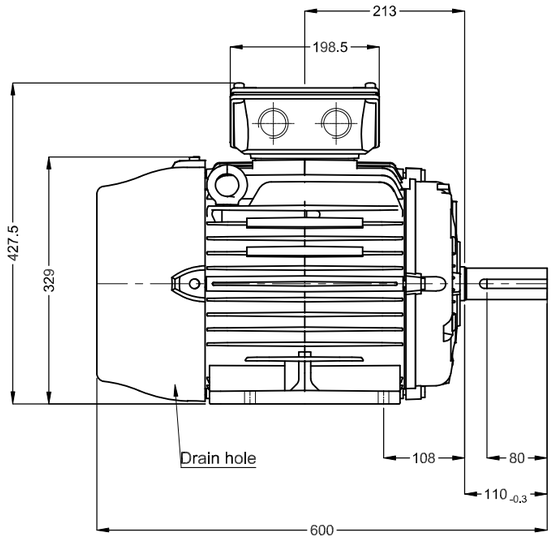

Color RAL 7024

Painting plan 203A

Mounting B3T

DE Shaft End

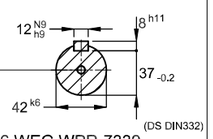

DM16 WEG WPR-7339

15 kW 02 Poles 50 Hz | A

					Scale	1 : 8	
			PIRWBUSER				00
ECM	LOC	SUMMARY OF MODIFICATIONS	EXECUTED	CHECKED	RELEASED	DATE	VER

EXECUTED	PIRWBUSER	THREE PH. MOTOR WGOST IE1	PREVIEW
CHECKED		FRAME 160S IP55 TEFC	WDD 00
RELEASED			
REL. DATE		WEG Saint-Petersburg [Support]	SHEET 1 / 1

Dimensions in mm

A3

WEG's property. Forbidden reproduction without previous authorization.