TECEsquare 9242800 – 9242809

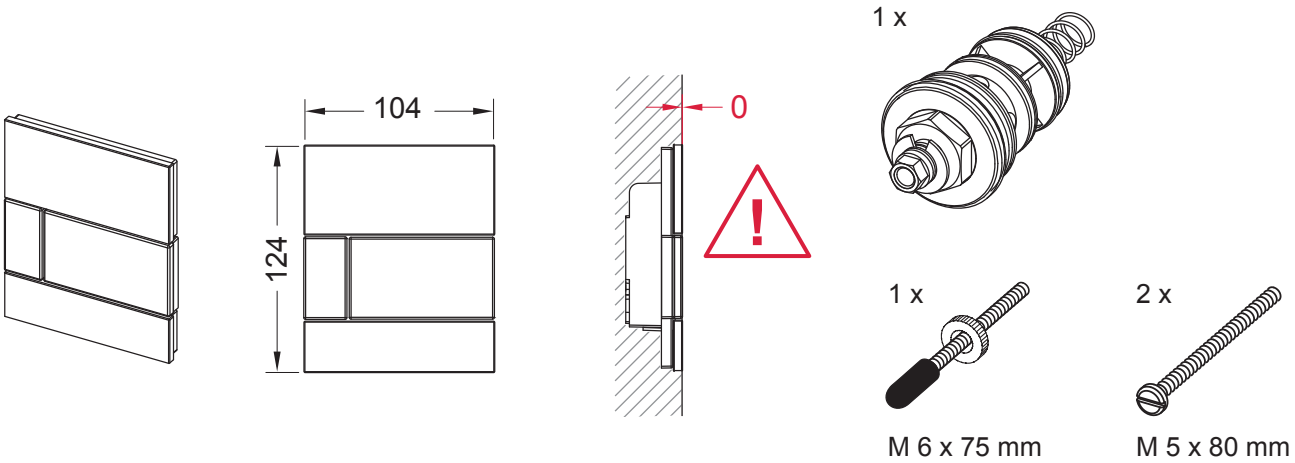

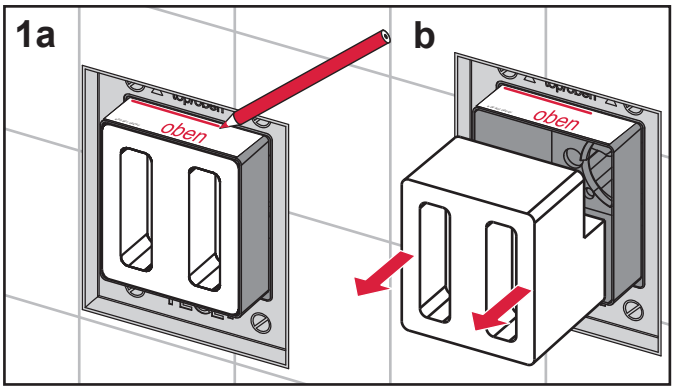

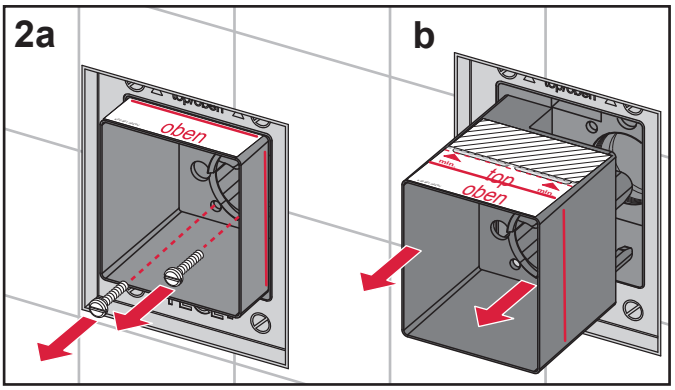

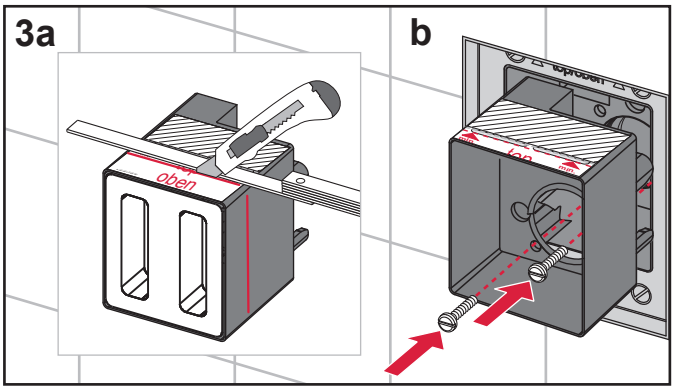

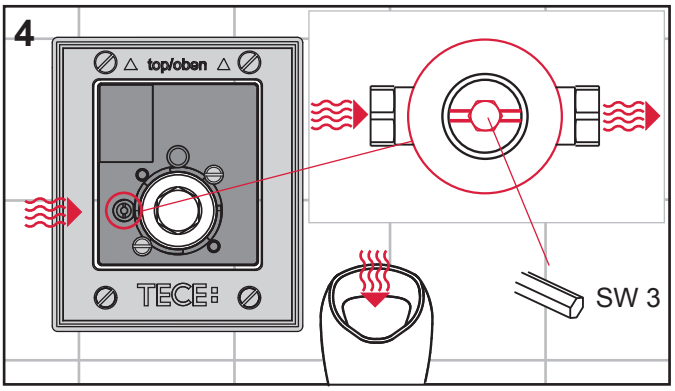

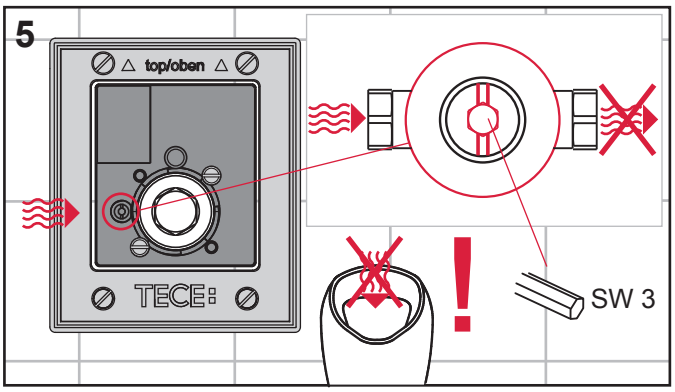

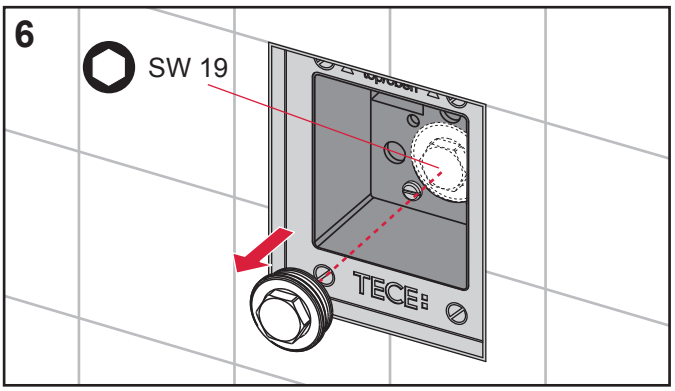

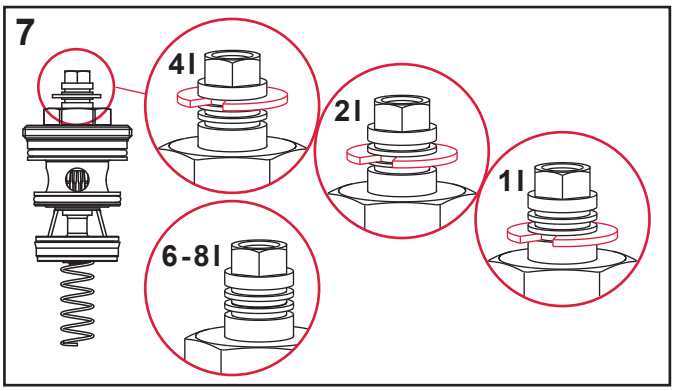

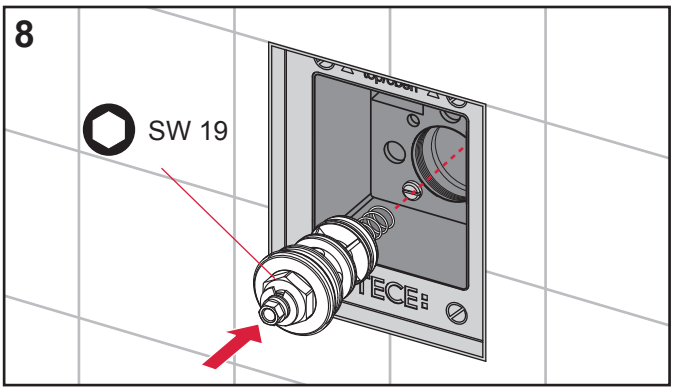

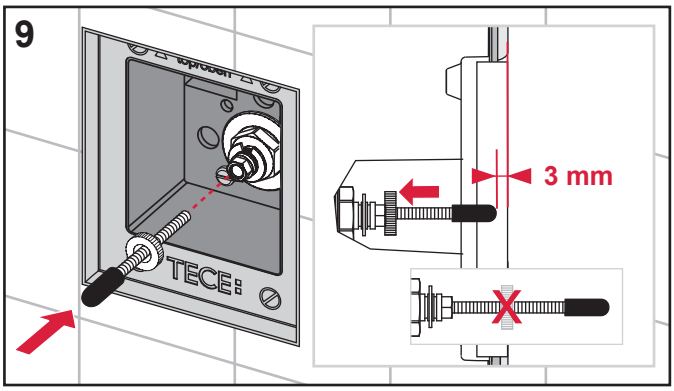

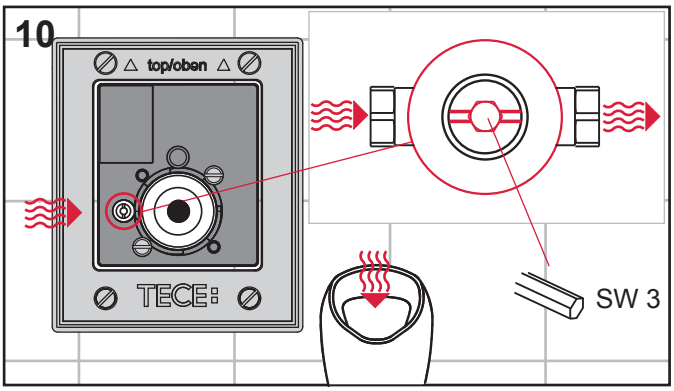

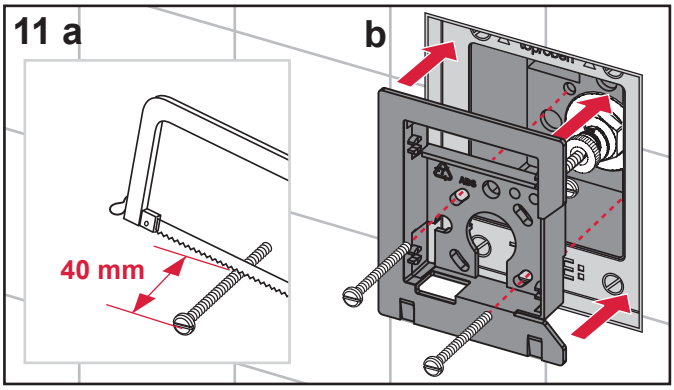

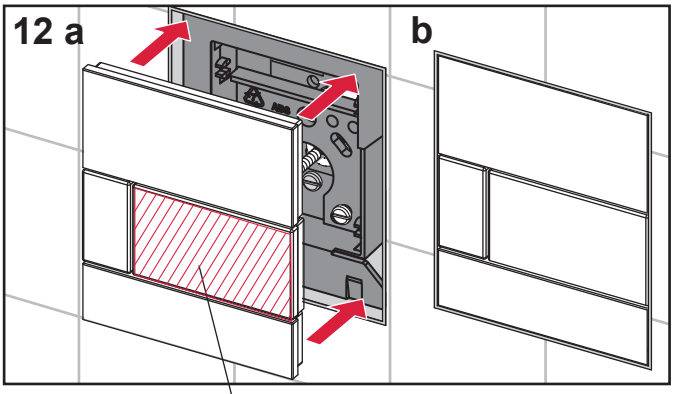

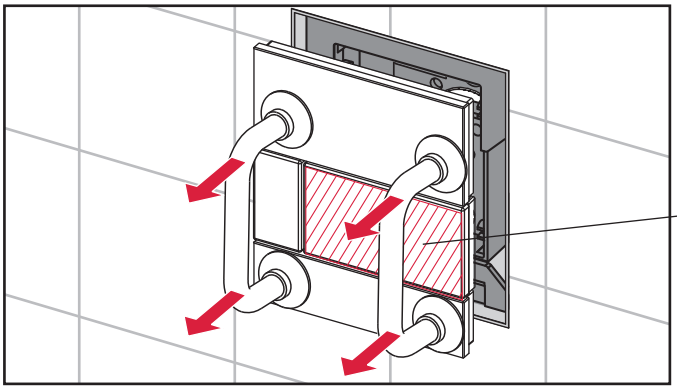

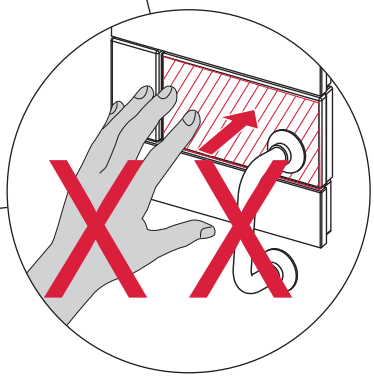

SP430 054 00 b