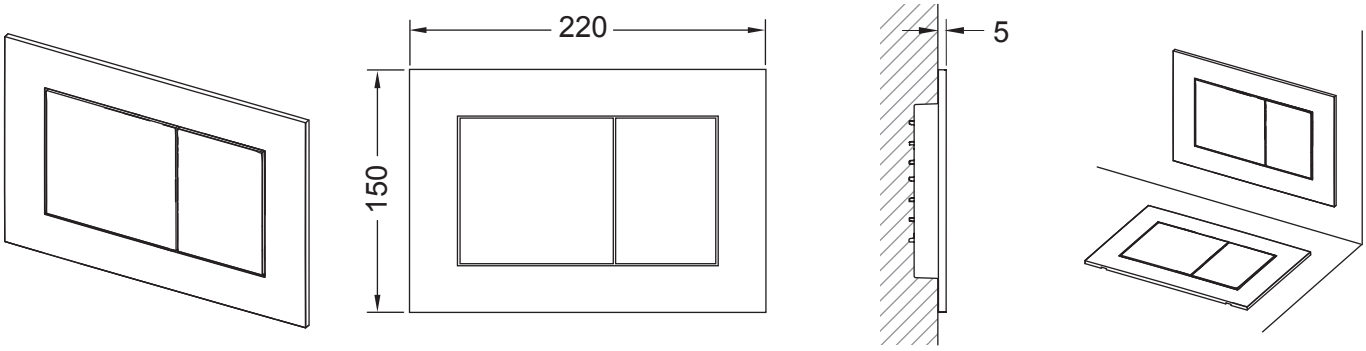
220
150
5

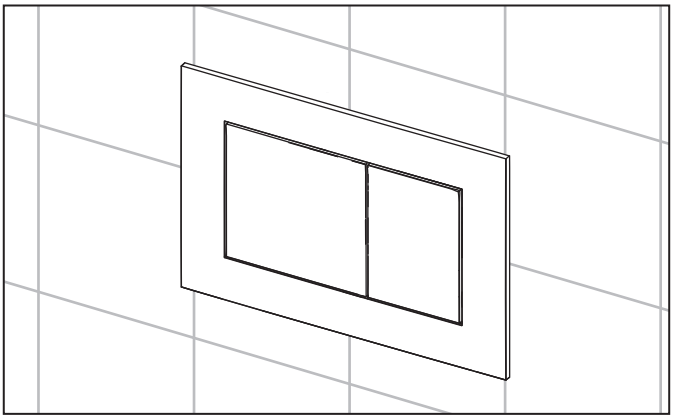

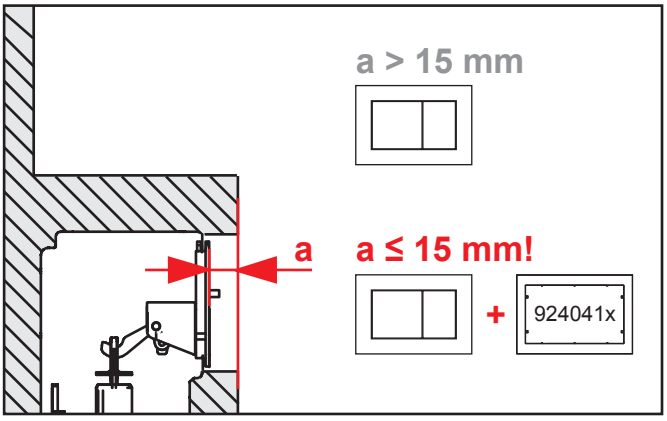
a > 15 mm
a
a ≤ 15 mm!
+
924041x

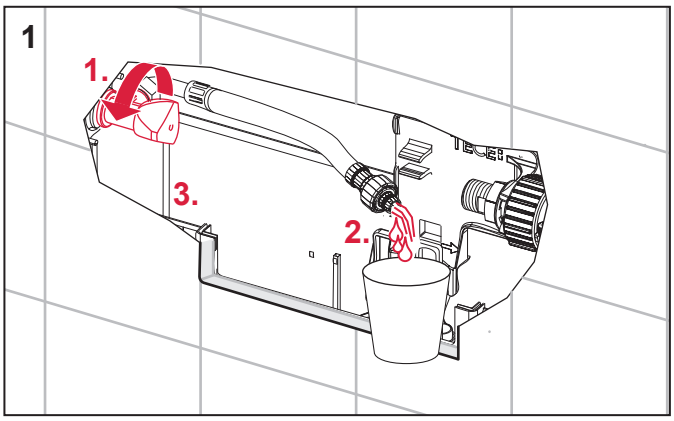
1
1.
2.
3.

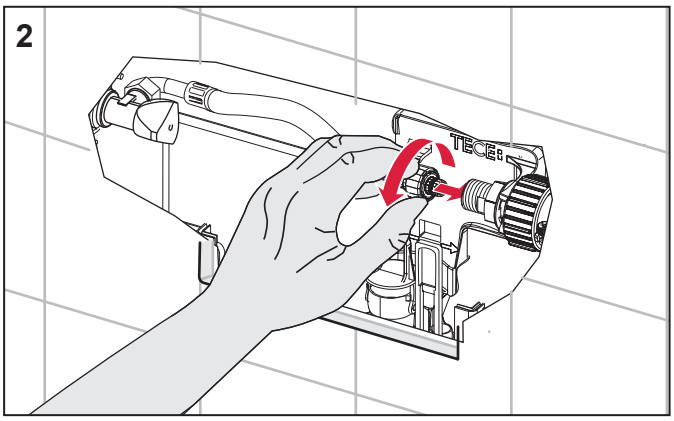
2

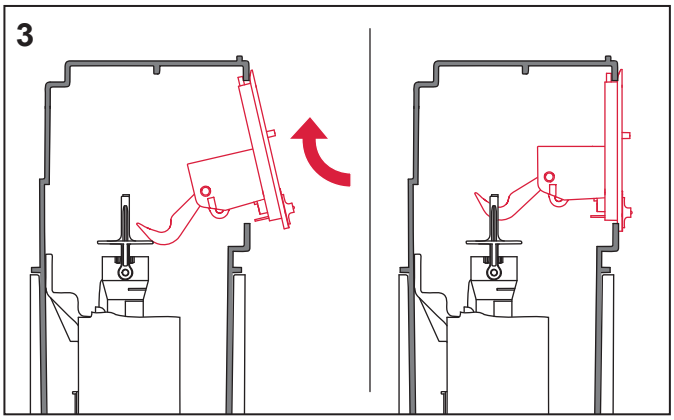
3

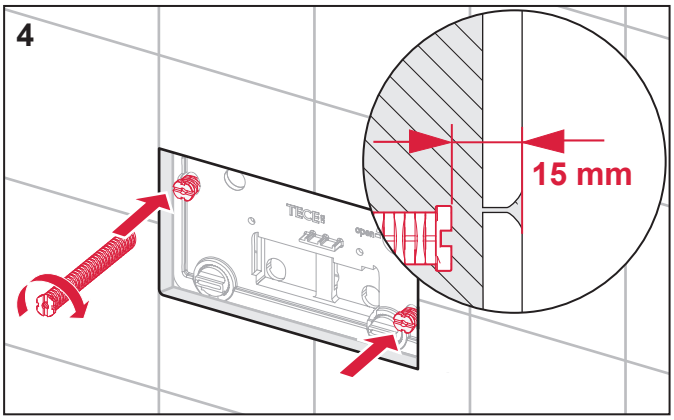
4
15 mm

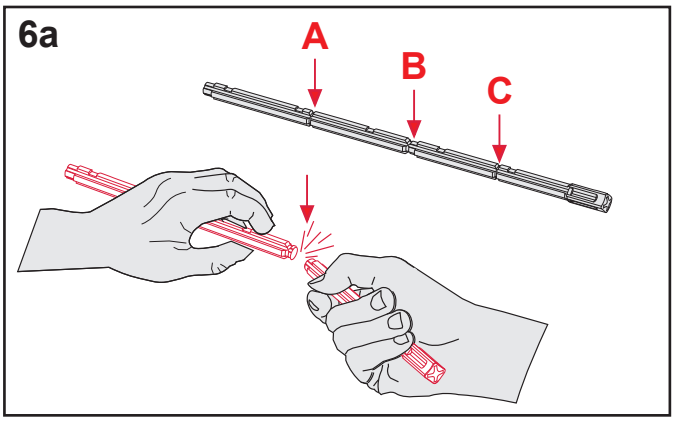

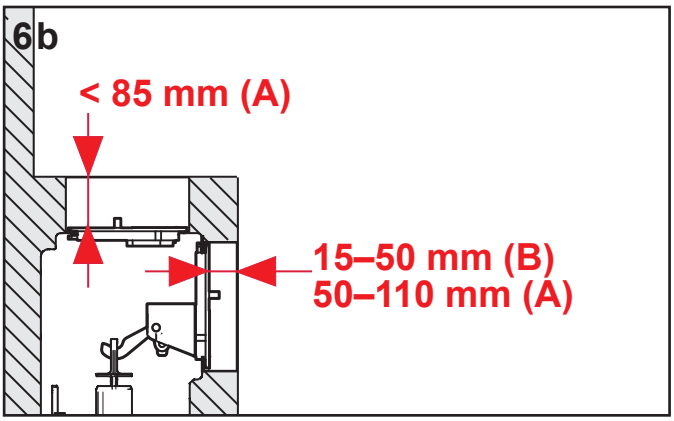

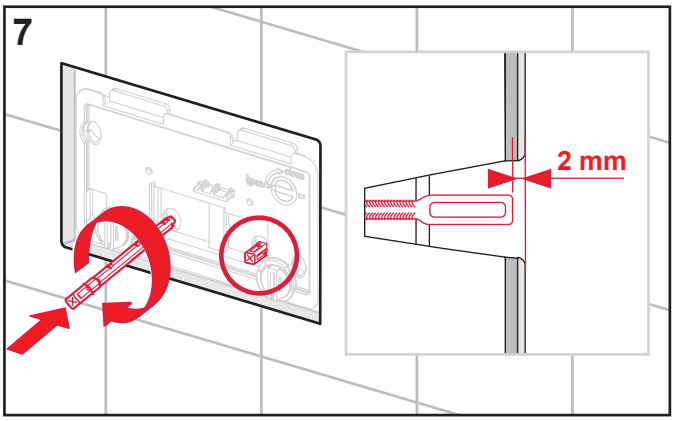

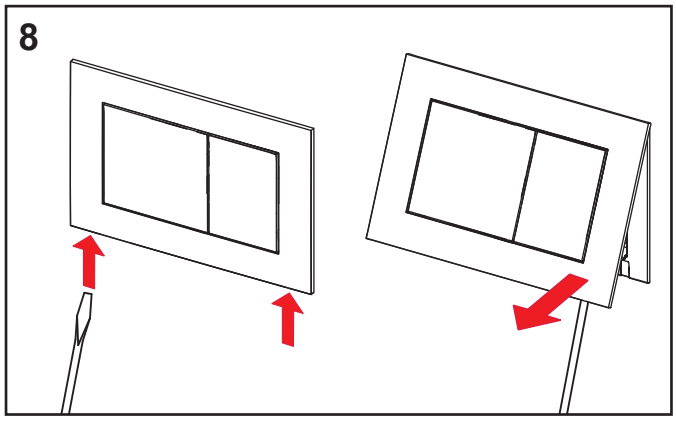

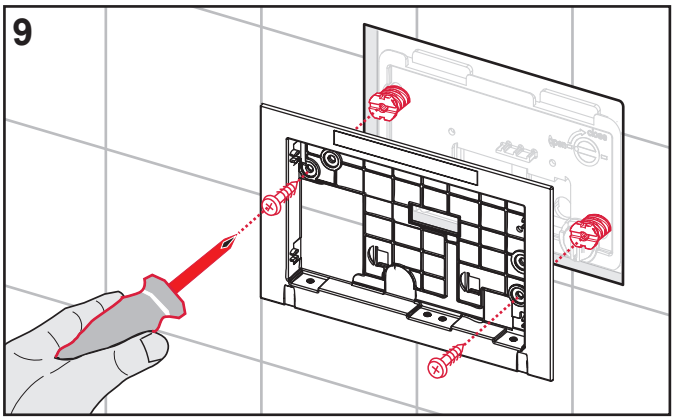

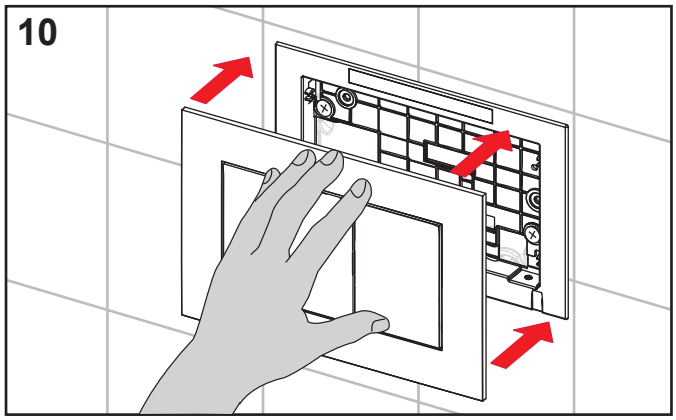

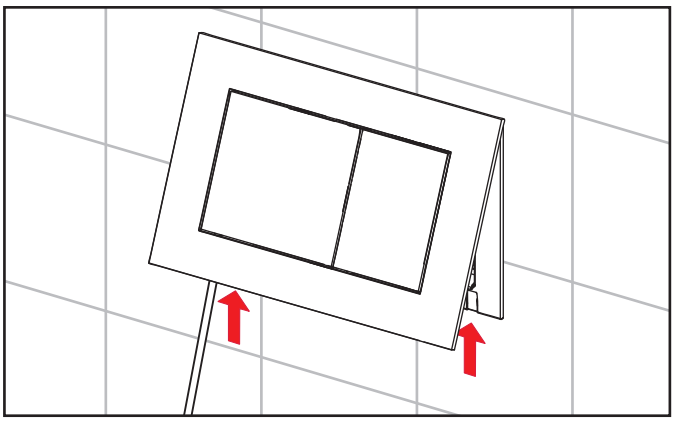

SP430 058 00 c