LV TYPE

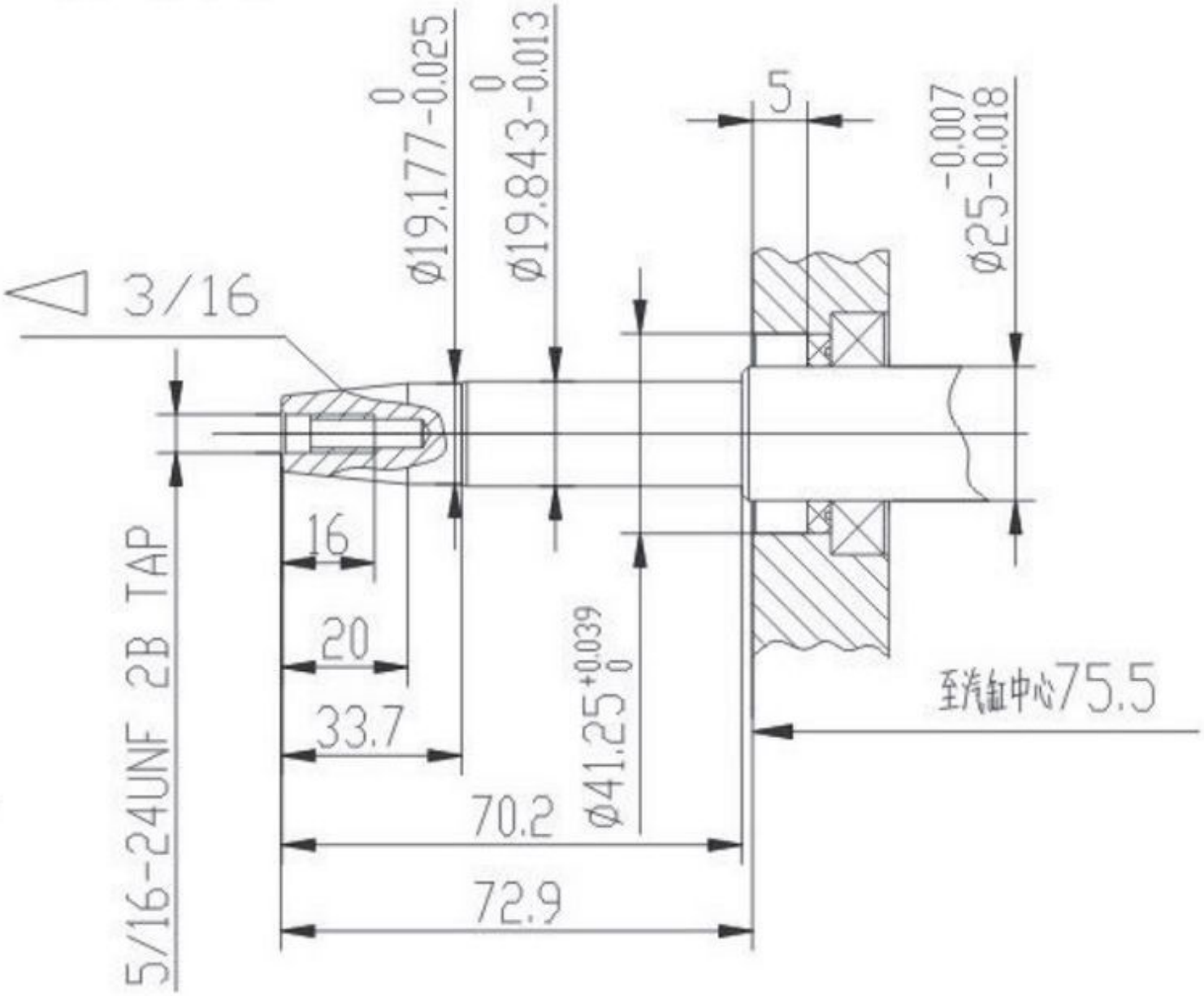
3/16
5/16-24UNF 2B TAP
16
20
33.7
70.2
72.9
Ø19.177 0 -0.025
Ø19.843 0 -0.013
Ø41.25 +0.039 0
5
Ø25 -0.007 -0.018
至汽缸中心75.5